Centre No.						Paper Reference							Surname	Initial(s)
Candidate No.						6	6	6	4	/	0	1	Signature	

Paper Reference(s)

6664/01

Edexcel GCE

Core Mathematics C2

Advanced Subsidiary

Wednesday 9 January 2008 – Afternoon

Time: 1 hour 30 minutes

Examiner's use only		

Team Leader's use only		

Question Number	Leave Blank
1	
2	
3	
4	
5	
6	
7	
8	
9	
Total	

Materials required for examination	Items included with question papers
Mathematical Formulae (Green)	Nil

Candidates may use any calculator allowed by the regulations of the Joint Council for Qualifications. Calculators must not have the facility for symbolic algebra manipulation, differentiation and integration, or have retrievable mathematical formulae stored in them.

Instructions to Candidates

In the boxes above, write your centre number, candidate number, your surname, initial(s) and signature.
Check that you have the correct question paper.
You must write your answer for each question in the space following the question.
When a calculator is used, the answer should be given to an appropriate degree of accuracy.

Information for Candidates

A booklet 'Mathematical Formulae and Statistical Tables' is provided.
Full marks may be obtained for answers to ALL questions.
The marks for individual questions and the parts of questions are shown in round brackets: e.g. **(2)**.
There are 9 questions in this question paper. The total mark for this paper is 75.
There are 24 pages in this question paper. Any blank pages are indicated.

Advice to Candidates

You must ensure that your answers to parts of questions are clearly labelled.
You should show sufficient working to make your methods clear to the Examiner.
Answers without working may not gain full credit.

This publication may be reproduced only in accordance with Edexcel Limited copyright policy.
©2008 Edexcel Limited.

Printer's Log. No.
H26320B
W850/R6664/57570 3/3/3/3/3/1

H 2 6 3 2 0 B 0 1 2 4

Turn over

edexcel
advancing learning, changing lives

https://xtremepape.rs/

Leave blank

1. (a) Find the remainder when

$$x^3 - 2x^2 - 4x + 8$$

is divided by

(i) $x - 3$,

(ii) $x + 2$.

(3)

(b) Hence, or otherwise, find all the solutions to the equation

$$x^3 - 2x^2 - 4x + 8 = 0.$$

(4)

https://xtremepape.rs/

Leave blank

Question 1 continued

Q1

(Total 7 marks)

H 2 6 3 2 0 B 0 3 2 4

Turn over

https://xtremepape.rs/

Leave blank

2. The fourth term of a geometric series is 10 and the seventh term of the series is 80.

For this series, find

(a) the common ratio,

(2)

(b) the first term,

(2)

(c) the sum of the first 20 terms, giving your answer to the nearest whole number.

(2)

https://xtremepape.rs/

Leave blank

Question 2 continued

(Total 6 marks)

Q2

H 2 6 3 2 0 B 0 5 2 4

Turn over

https://xtremepape.rs/

Leave blank

3. (a) Find the first 4 terms of the expansion of $\left(1+\frac{x}{2}\right)^{10}$ in ascending powers of x, giving each term in its simplest form.

(4)

(b) Use your expansion to estimate the value of $(1.005)^{10}$, giving your answer to 5 decimal places.

(3)

H 2 6 3 2 0 B 0 6 2 4

https://xtremepape.rs/

Leave blank

Question 3 continued

(Total 7 marks)

Q3

H 2 6 3 2 0 B 0 7 2 4

Turn over

https://xtremepape.rs/

Leave blank

4. (a) Show that the equation

$$3 \sin^2 \theta - 2 \cos^2 \theta = 1$$

can be written as

$$5 \sin^2 \theta = 3.$$

(2)

(b) Hence solve, for $0° \leqslant \theta < 360°$, the equation

$$3 \sin^2 \theta - 2 \cos^2 \theta = 1,$$

giving your answers to 1 decimal place.

(7)

H 2 6 3 2 0 B 0 8 2 4

https://xtremepape.rs/

Leave blank

Question 4 continued

Q4

(Total 9 marks)

H 2 6 3 2 0 B 0 9 2 4

Turn over

https://xtremepape.rs/

Leave blank

5. Given that a and b are positive constants, solve the simultaneous equations

$$a = 3b,$$

$$\log_3 a + \log_3 b = 2.$$

Give your answers as exact numbers.

(6)

H 2 6 3 2 0 B 0 1 0 2 4

https://xtremepape.rs/

Leave blank

Question 5 continued

Q5

(Total 6 marks)

H 2 6 3 2 0 B 0 1 1 2 4

Turn over

https://xtremepape.rs/

Leave blank

6. **Figure 1**

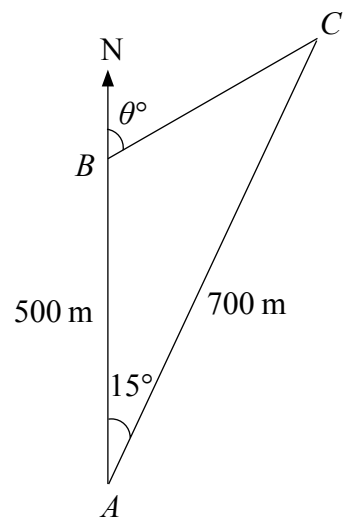

Figure 1 shows 3 yachts A, B and C which are assumed to be in the same horizontal plane. Yacht B is 500 m due north of yacht A and yacht C is 700 m from A. The bearing of C from A is 015°.

(a) Calculate the distance between yacht B and yacht C, in metres to 3 significant figures.

(3)

The bearing of yacht C from yacht B is $\theta°$, as shown in Figure 1.

(b) Calculate the value of θ.

(4)

H 2 6 3 2 0 B 0 1 2 2 4

https://xtremepape.rs/

Leave blank

Question 6 continued

(Total 7 marks)

Q6

H 2 6 3 2 0 B 0 1 3 2 4

Turn over

https://xtremepape.rs/

Leave blank

7. **Figure 2**

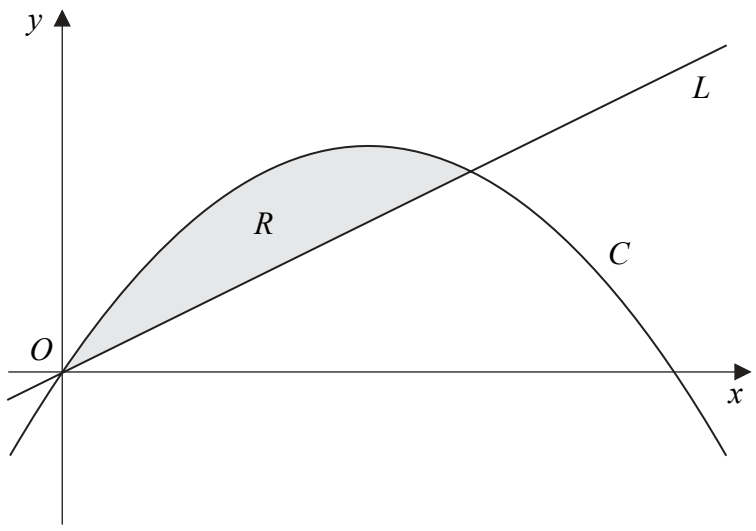

In Figure 2 the curve C has equation $y = 6x - x^2$ and the line L has equation $y = 2x$.

(a) Show that the curve C intersects the x-axis at $x = 0$ and $x = 6$.

(1)

(b) Show that the line L intersects the curve C at the points (0, 0) and (4, 8).

(3)

The region R, bounded by the curve C and the line L, is shown shaded in Figure 2.

(c) Use calculus to find the area of R.

(6)

H 2 6 3 2 0 B 0 1 4 2 4

https://xtremepape.rs/

Leave blank

Question 7 continued

https://xtremepape.rs/

Leave blank

Question 7 continued

https://xtremepape.rs/

Leave blank

Question 7 continued

(Total 10 marks)

Q7

H 2 6 3 2 0 B 0 1 7 2 4

Turn over

https://xtremepape.rs/

Leave blank

8. A circle C has centre M (6, 4) and radius 3.

(a) Write down the equation of the circle in the form

$$(x - a)^2 + (y - b)^2 = r^2.$$

(2)

Figure 3

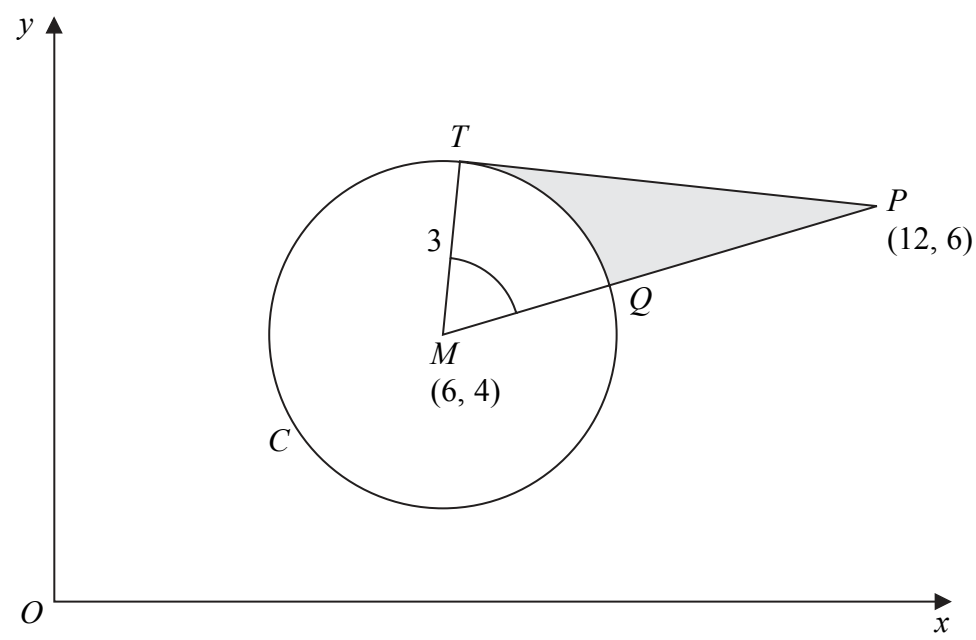

Figure 3 shows the circle C. The point T lies on the circle and the tangent at T passes through the point P (12, 6). The line MP cuts the circle at Q.

(b) Show that the angle TMQ is 1.0766 radians to 4 decimal places.

(4)

The shaded region TPQ is bounded by the straight lines TP, QP and the arc TQ, as shown in Figure 3.

(c) Find the area of the shaded region TPQ. Give your answer to 3 decimal places.

(5)

H 2 6 3 2 0 B 0 1 8 2 4

https://xtremepape.rs/

Leave blank

Question 8 continued

https://xtremepape.rs/

Leave blank

Question 8 continued

https://xtremepape.rs/

Leave blank

Question 8 continued

Q8

(Total 11 marks)

H 2 6 3 2 0 B 0 2 1 2 4

Turn over

https://xtremepape.rs/

Leave blank

9. **Figure 4**

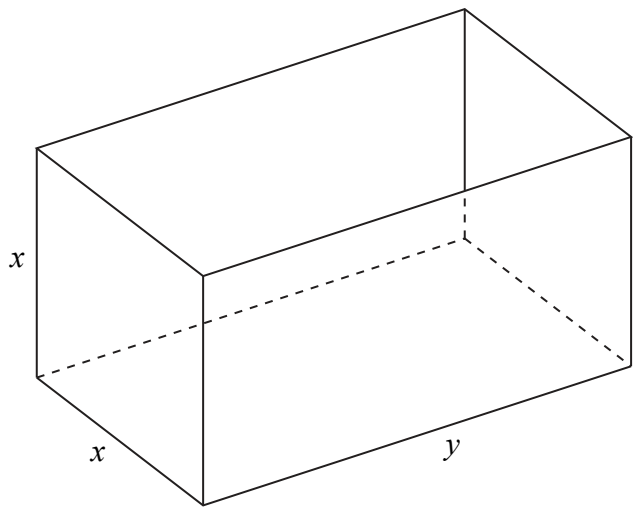

Figure 4 shows an open-topped water tank, in the shape of a cuboid, which is made of sheet metal. The base of the tank is a rectangle x metres by y metres. The height of the tank is x metres.

The capacity of the tank is $100\ \text{m}^3$.

(a) Show that the area $A\ \text{m}^2$ of the sheet metal used to make the tank is given by

$$A = \frac{300}{x} + 2x^2.$$

(4)

(b) Use calculus to find the value of x for which A is stationary.

(4)

(c) Prove that this value of x gives a minimum value of A.

(2)

(d) Calculate the minimum area of sheet metal needed to make the tank.

(2)

https://xtremepape.rs/

Leave blank

Question 9 continued

https://xtremepape.rs/

Leave blank

Question 9 continued

Q9

(Total 12 marks)

TOTAL FOR PAPER: 75 MARKS

END

H 2 6 3 2 0 B 0 2 4 2 4

https://xtremepape.rs/